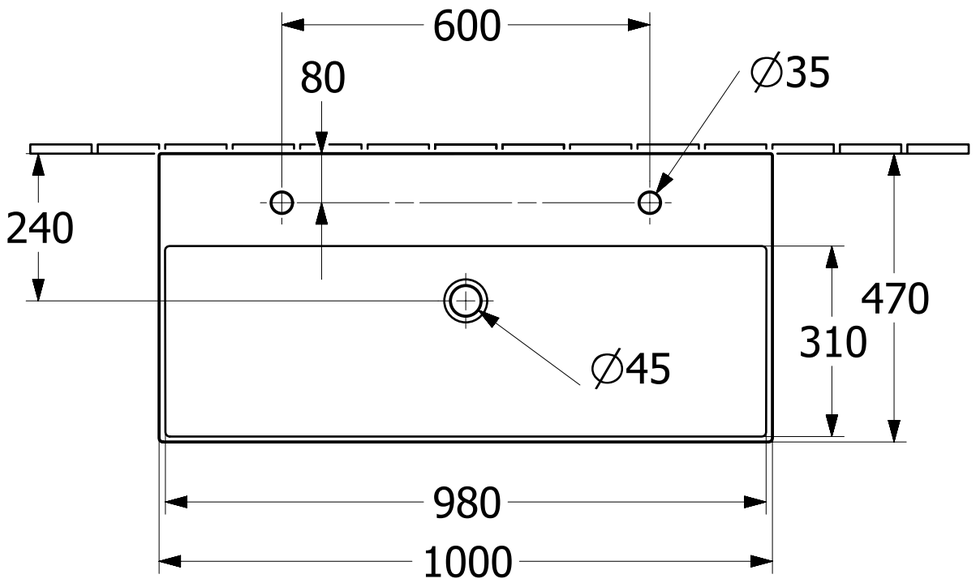

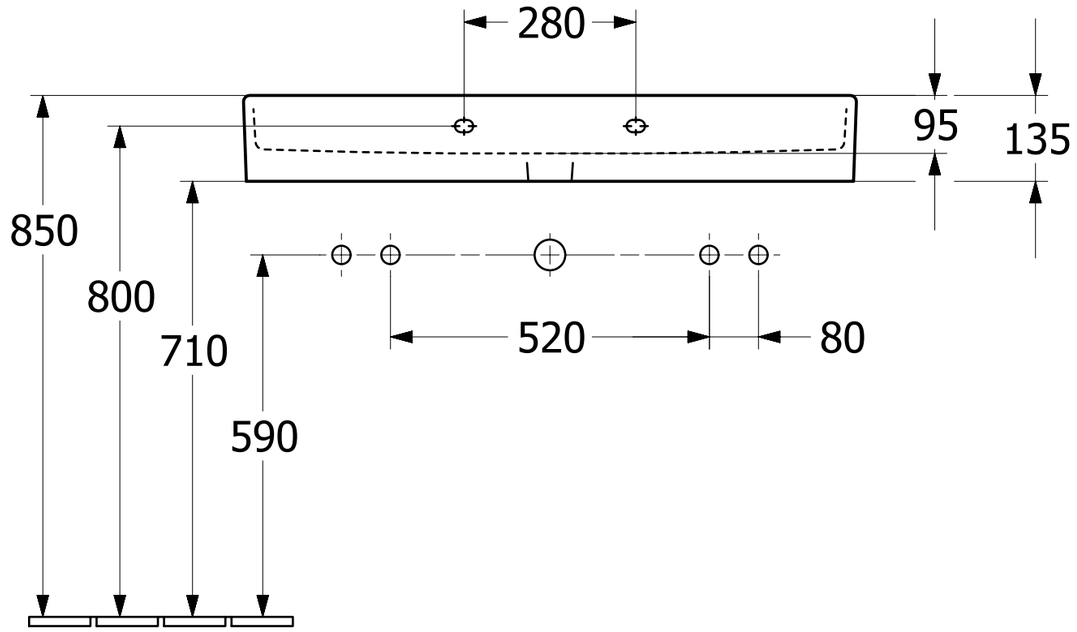

Memento 2.0 4A22A1 4A22A4	Villeroy & Boch 1748
V03 / 20.04.2023	