# Technische Daten/ Technical Data

KLUDI OBJEKTA
kitchen faucet wall mounted
DN 15

Ref.: 328820575

Finishes:
05 chrome

Product description
Manufacturer KLUDI GmbH & Co. KG
Typ: KLUDI OBJEKTA
kitchen faucet wall mounted
Ref.: 328820575

kitchen faucet
single lever mixer
wall mounted
solid lever, metal
aerator M24
ceramic cartridge with hot water safety device
flow rate at 3 bar 12 l/min.
swivel or fixable spout
S-unions G1/2 x G3/4

## Produktabbildung/ Product picture



## Maßzeichnung/ Dimensional drawing

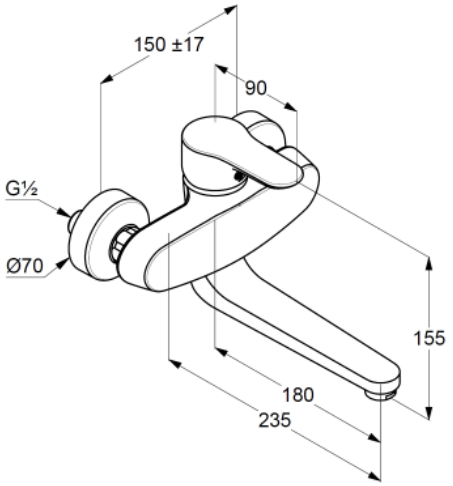


## Durchfluss/ Flow rate

