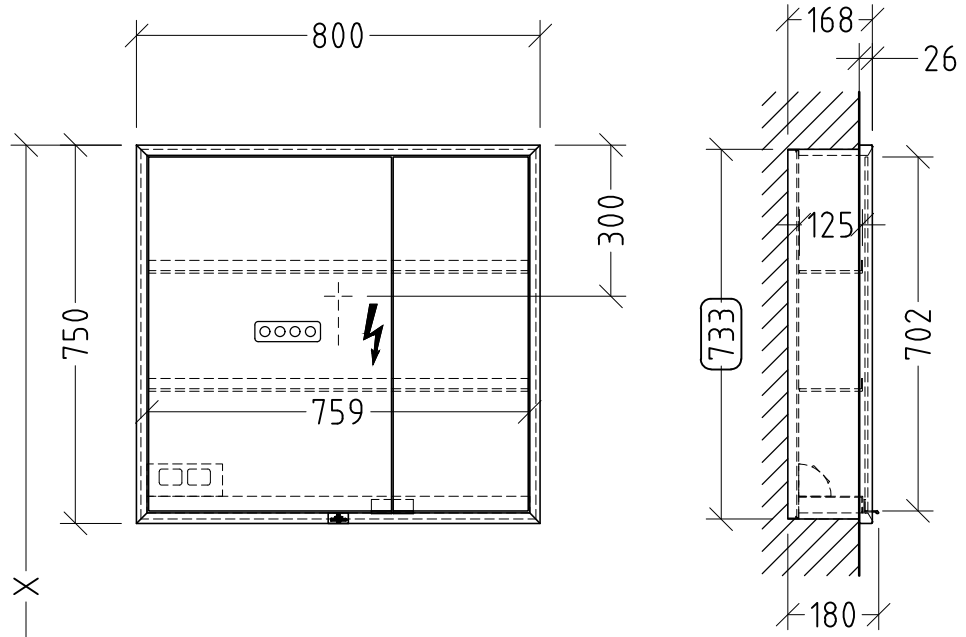

X = Variabel

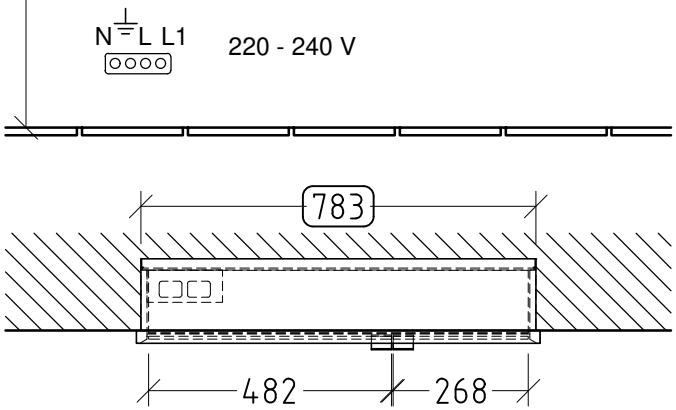

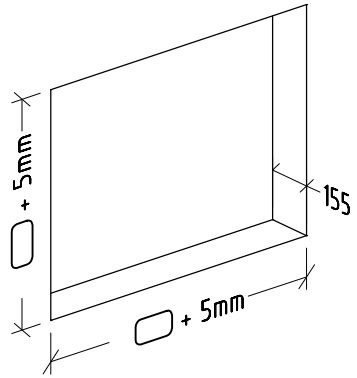

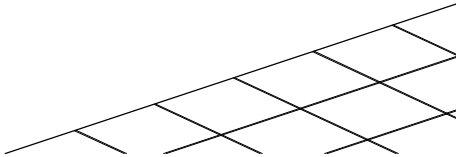

MyView Now IN (+) A4568000 / A4588000	Villeroy & Boch 1748
V01 / 01.10.2020	