Ceratherm T A8375..

Ideal Standard

Produced since: **Jan. 2024**

Pre-mixer thermostat with hose kit
for connection on the angle valve
chrome **A8375AA**

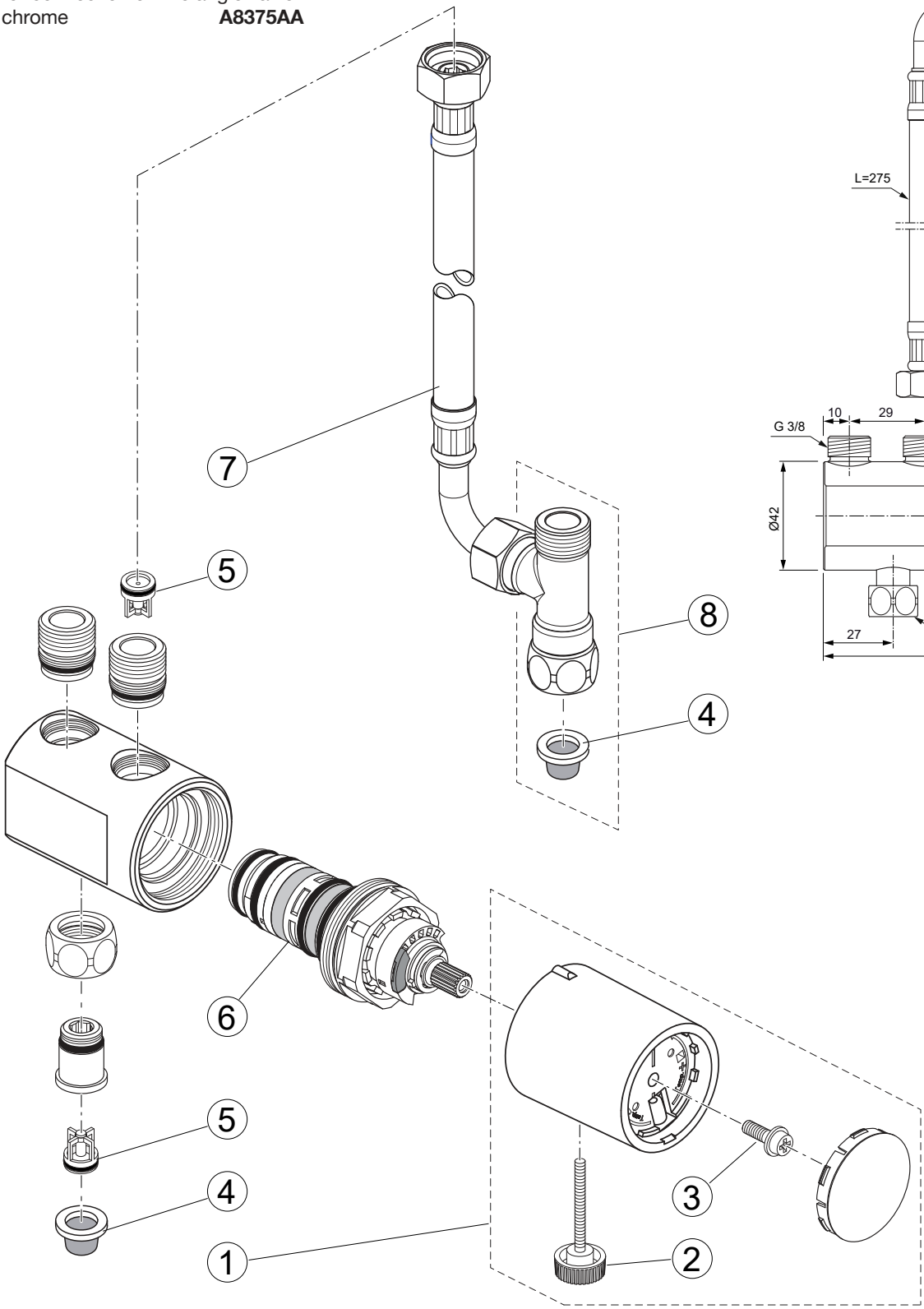

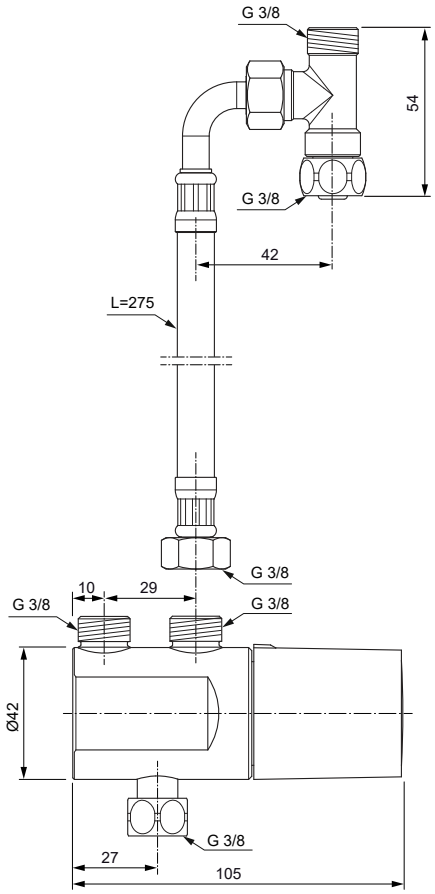

Pos.	Description	Part-Number	Qty.
1	Handle cpl. with Logo IS	**A 861 805 AA**	1 Set
2	Srew for desinfection	**A 860 888 NU***	1 pcs
3	Screw M4x12	**A 963 647 NU**	2 pcs
4	Filtre	**A 962 136 NU**	1 pcs
5	Non-return valve	**A 960 944 NU**	2 pcs
6	Thermostatic Cartridge	**A 861 371 NU**	1 pcs
7	Fex. hose with elbow	**A 860 889 NU**	1 pcs

Pos.	Description	Part-Number	Qty.
8	T-connection G3/8	**A 861 566 AA**	1 Set

**Universal set (not all parts needed)*

Ceratherm T